5. Engine Control Module (ECM) I/O Signal

A: ELECTRICAL SPECIFICATION

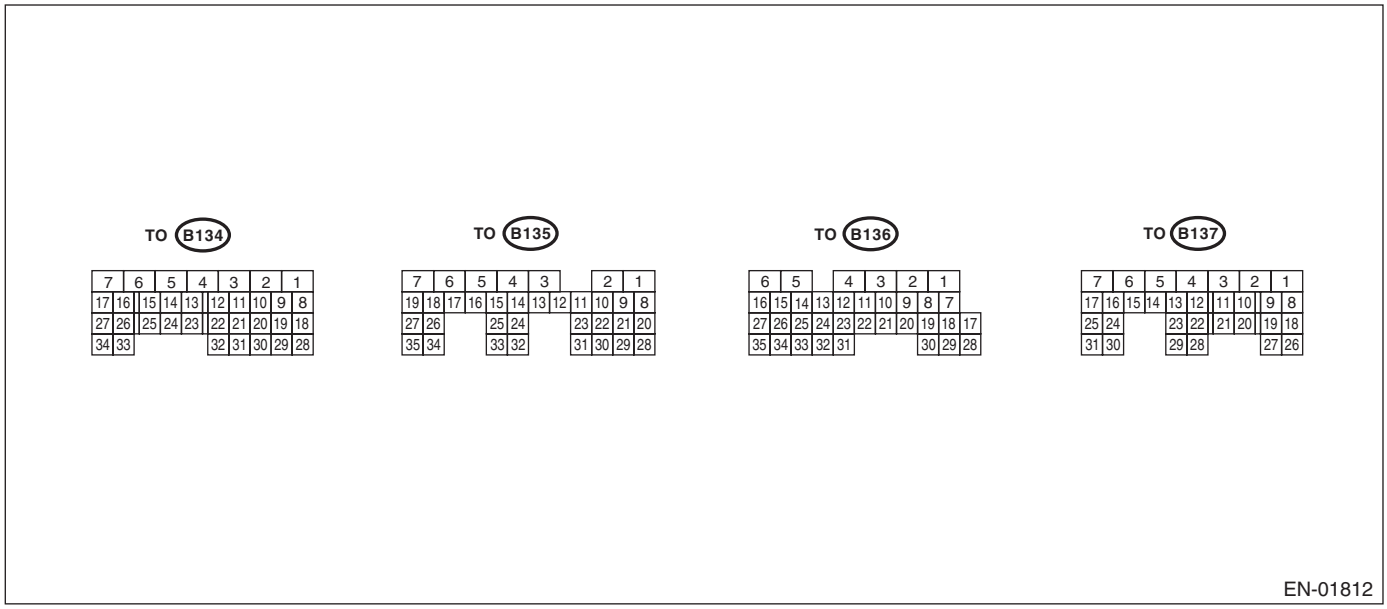

Description		Connector No.	Terminal No.	Signal (V)		Note
				Ignition SW ON (engine OFF)	Engine ON (idling)	
Crankshaft position sensor	Signal (+)	B134	13	0	–7 — +7	Sensor output waveform
	Signal (–)	B134	14	0	0	—
	Shield	B134	24	0	0	—
Rear oxygen sensor	Signal	B135	4	0	0 — 0.9	—
	Shield	B135	1	0	0	—
	GND (sensor)	B135	30	0	0	—
Front oxygen (A/F) sensor heater	Signal 1	B136	3	0 — 1.0	—	Sensor output waveform
	Signal 2	B136	2	0 — 1.0	—	Sensor output waveform
Rear oxygen sensor heater signal		B136	4	0 — 1.0	—	Sensor output waveform
Engine coolant temperature sensor	Signal	B134	34	1.0 — 1.4	1.0 — 1.4	After engine is warmed-up.
	GND (sensor)	B134	29	0	0	After engine is warmed-up.
Vehicle speed signal		B136	13	0 or 5	0 or 5	“5” and “0” are repeatedly displayed when vehicle is driven.
Air flow sensor	Signal	B135	26	—	0.3 — 4.5	—
	Shield	B135	35	0	0	—
	GND	B135	34	0	0	—
Intake air temperature sensor signal		B135	18	0.3 — 4.6	0.3 — 4.6	—
Tumble generator valve position sensor RH	Signal	B134	26	Fully closed: 3.8 — 4.9 Fully opened: 0.2 — 0.9		—
	Power supply	B134	19	5	5	—
	GND (sensor)	B134	29	0	0	—
Tumble generator valve position sensor LH	Signal	B134	16	Fully closed: 3.8 — 4.9 Fully opened: 0.2 — 0.9		—
	Power supply	B134	19	5	5	—
	GND (sensor)	B134	29	0	0	—

Engine Control Module (ECM) I/O Signal

Description		Connector No.	Terminal No.	Signal (V)		Note
				Ignition SW ON (engine OFF)	Engine ON (idling)	
Tumble generator valve RH (open)		B137	22	0 or 10 — 13	0 or 12 — 14	Sensor output waveform
Tumble generator valve RH (closed)		B137	23	0 or 10 — 13	0 or 12 — 14	Sensor output waveform
Tumble generator valve LH (open)		B137	12	0 or 10 — 13	0 or 12 — 14	Sensor output waveform
Tumble generator valve LH (closed)		B137	13	0 or 10 — 13	0 or 12 — 14	Sensor output waveform
Wastegate control solenoid valve		B137	27	0 or 10 — 13	0 or 12 — 14	Sensor output waveform
Starter switch		B136	32	0	0	Cranking: 8 — 14
A/C switch		B136	24	ON: 10 — 13 OFF: 0	ON: 12 — 14 OFF: 0	—
Ignition switch		B135	19	10 — 13	12 — 14	—
Neutral position switch		B136	31	ON: 10 — 13 OFF: 0	ON: 12 — 14 OFF: 0	—
Test mode connector		B135	27	10 — 13	12 — 14	When connected: 0
Knock sensor	Signal	B134	15	2.8	2.8	—
	Shield	B134	25	0	0	—
Back-up power supply		B135	5	10 — 13	12 — 14	Ignition switch “OFF”: 10 — 13
Control module power supply		B134	7	10 — 13	12 — 14	—
		B135	2	10 — 13	12 — 14	—
Sensor power supply		B134	19	5	5	—
Ignition control	#1	B137	18	0	12 — 14	Waveform
	#2	B137	19	0	12 — 14	Waveform
	#3	B137	20	0	12 — 14	Waveform
	#4	B137	21	0	12 — 14	Waveform
Fuel injector	#1	B137	8	10 — 13	1 — 14	Waveform
	#2	B137	9	10 — 13	1 — 14	Waveform
	#3	B137	10	10 — 13	1 — 14	Waveform
	#4	B137	11	10 — 13	1 — 14	Waveform
Fuel pump control unit	Signal 1	B136	12	0 or 5	0 or 5	—
	Signal 2	B135	33	10 — 13	12 — 14	—
A/C relay control		B136	9	ON: 0.5 or less OFF: 10 — 13	ON: 0.5 or less OFF: 12 — 14	—
Radiator fan relay 1 control		B136	18	ON: 0.5 or less OFF: 10 — 13	ON: 0.5 or less OFF: 12 — 14	—
Radiator fan relay 2 control		B136	29	ON: 0.5 or less OFF: 10 — 13	ON: 0.5 or less OFF: 12 — 14	Model with A/C only
Malfunction indicator light		B136	11	—	—	Light “ON”: 1 or less Light “OFF”: 10 — 14
Engine speed output		B136	22	—	0— 13 or more	Waveform
Purge control solenoid valve 1		B137	29	ON: 1 or less OFF: 10 — 13	ON: 1 or less OFF: 12 — 14	Sensor output waveform
Purge control solenoid valve 2		B136	7	ON: 1 or less OFF: 10 — 13	ON: 1 or less OFF: 12 — 14	Sensor output waveform
Manifold absolute pressure sensor	Signal	B134	6	1.7 — 2.4	1.1 — 1.6	—
	Power supply	B134	19	5	5	
	GND (sensor)	B134	29	0	0	

Description		Connector No.	Terminal No.	Signal (V)		Note
				Ignition SW ON (engine OFF)	Engine ON (idling)	
Fuel tank pressure sensor	Signal	B135	32	2.3 — 2.7	2.3 — 2.7	Valve operates after removing fuel filler cap and installing again.
	Power supply	B135	22	5	5	
	GND (sensor)	B135	30	0	0	—
Pressure control solenoid valve		B136	28	ON: 1 or less OFF: 10 — 13	ON: 1 or less OFF: 12 — 14	—
Drain valve		B136	17	ON: 1 or less OFF: 10 — 13	ON: 1 or less OFF: 12 — 14	—
Fuel level sensor		B135	10	0.12 — 4.75	0.12 — 4.75	—
Fuel temperature sensor signal		B135	17	2.5 — 3.8	2.5 — 3.8	Ambient temperature: 25°C (77°F)
Blow-by leak diagnosis signal		B134	30	0	0	At the time of open circuit (fault): 5
Small light switch		B135	15	ON: 0 OFF: 10 — 13	ON: 0 OFF: 12 — 14	—
Blower fan switch		B135	16	ON: 0 OFF: 10 — 13	ON: 0 OFF: 12 — 14	—
Rear defogger switch		B135	14	ON: 0 OFF: 10 — 13	ON: 0 OFF: 12 — 14	—
Power steering oil pressure switch		B134	33	10 — 13	ON: 0 OFF: 12 — 14	—
Front oxygen (A/F) sensor signal (+)		B135	9	2.8 — 3.2	2.8 — 3.2	—
Front oxygen (A/F) sensor signal (–)		B135	8	2.4 — 2.7	2.4 — 2.7	—
Front oxygen (A/F) sensor shield		B135	1	0	0	—
SSM/GST communication line		B136	16	1 ←→ 4	1 ←→ 4	—
Ground (engine 4)		B137	1	0	0	—
Ground	(Ignition 1)	B137	26	0	0	—
	(Ignition 2)	B137	6			
Ground (engine 3)		B137	2	0	0	—
Ground (engine 5)		B137	3	0	0	—
Ground (body)		B136	6	0	0	—
Ground (engine 1)		B134	5	0	0	—
Ground (engine 2)		B137	7	0	0	—
Camshaft position sensor (LH)		B134	21	0 — 0.9	ON: 0 OFF: 4.7 — 5.3	Sensor output waveform
Camshaft position sensor (RH)		B134	11	0 — 0.9	ON: 0 OFF: 4.7 — 5.3	Sensor output waveform
Electronic throttle control	Main	B134	18	0.64 — 0.72 Fully opened: 3.96	0.64 — 0.72 (After engine is warmed-up.)	Fully closed: 0.6 Fully opened: 3.96
	Sub	B134	28	1.51 — 1.58 Fully opened: 4.17	1.51— 1.58 (After engine is warmed-up.)	Fully closed: 1.48 Fully opened: 4.17
	Power supply	B134	19	5	5	—
	GND (sensor)	B134	29	0	0	—
Electronic throttle control motor (+)		B137	5	Duty waveform	Duty waveform	Drive frequency: 500 Hz

Description		Connector No.	Terminal No.	Signal (V)		Note
				Ignition SW ON (engine OFF)	Engine ON (idling)	
Electronic throttle control motor (–)		B137	4	Duty waveform	Duty waveform	Drive frequency: 500 Hz
Electronic throttle control motor power supply		B136	1	10 — 13	12 — 14	—
Electronic throttle control motor relay		B136	21	ON: 0 OFF: 10 — 13	ON: 0 OFF: 12 — 14	When ignition switch is turned to ON: ON
Oil flow control solenoid (LH)	Signal (+)	B137	15	ON: 10 — 13 OFF: 0	ON: 12 — 14 OFF: 0	—
	Signal (–)	B137	14	0	0	—
Oil flow control solenoid (RH)	Signal (+)	B137	17	ON: 10 — 13 OFF: 0	ON: 12 — 14 OFF: 0	—
	Signal (–)	B137	16	0	0	—
Immobilizer	Signal 1	B136	26	—	—	—
	Signal 2	B136	34	—	—	—
Self-shutoff control		B136	23	0	0	—
AT/MT identification signal		B136	15	0	0	MT model only
Accelerator pedal position sensor	Main sensor signal	B135	23	Fully closed: 1 Fully opened: 3.5	Fully closed: 1 Fully opened: 3.5	—
	Main power supply	B135	21	5	5	—
	GND (main sensor)	B135	29	0	0	—
	Sub sensor signal	B135	31	Fully closed: 1 Fully opened: 3.5	Fully closed: 1 Fully opened: 3.5	—
	Sub power supply	B135	22	5	5	—
	GND (Sub sensor)	B135	30	0	0	—
Cruise control main light		B135	6	ON: 0 OFF: 10 — 13	ON: 0 OFF: 12 — 14	—
Cruise control set light		B135	3	ON: 0 OFF: 10 — 13	ON: 0 OFF: 12 — 14	—
Clutch switch		B136	25	When clutch pedal is depressed: 0 When brake pedal is released: 10 — 13	When clutch pedal is depressed: 0 When brake pedal is released: 12 — 14	—
SET/COAST switch		B135	24	ON: 10 — 13 OFF: 0	ON: 12 — 14 OFF: 0	—
RESUME/ACC switch		B135	13	ON: 10 — 13 OFF: 0	ON: 12 — 14 OFF: 0	—
Brake switch 1		B135	20	When brake pedal is depressed: 0 When brake pedal is released: 10 — 13	When brake pedal is depressed: 0 When brake pedal is released: 12 — 14	—
Brake switch 2		B135	28	When brake pedal is depressed: 10 — 13 When brake pedal is released: 0	When brake pedal is depressed: 12 — 14 When brake pedal is released: 0	—
Cruise control main switch		B135	12	ON: 10 — 13 OFF: 0	ON: 12 — 14 OFF: 0	—
CAN communication	Signal (+)	B136	27	Pulse signal		—
	Signal (–)	B136	35	Pulse signal		—

Description		Connector No.	Terminal No.	Signal (V)		Note
				Ignition SW ON (engine OFF)	Engine ON (idling)	
Secondary air pipe pressure sensor	Signal	B134	27	1.7 — 2.4	1.1 — 1.6	—
	Power supply	B134	19	5	5	—
	GND (sensor)	B134	29	0	0	—
Secondary air combination valve relay 1		B136	19	ON: 0 OFF: 10 — 13	ON: 0 OFF: 12 — 14	—
Secondary air combination valve relay 2		B136	30	ON: 0 OFF: 10 — 13	ON: 0 OFF: 12 — 14	—
Secondary air pump relay		B136	8	ON: 0 OFF: 10 — 13	ON: 0 OFF: 12 — 14	—

Input/output name	Measuring condition	Waveform
1. Crankshaft position sensor	During idling	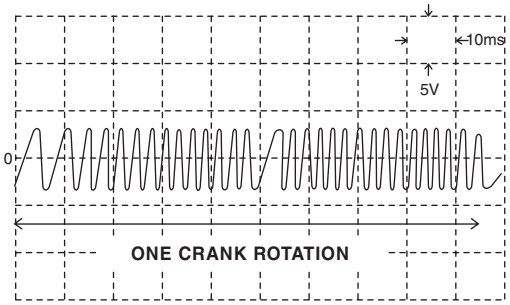 EN-05322
2. Camshaft position sensor	During idling	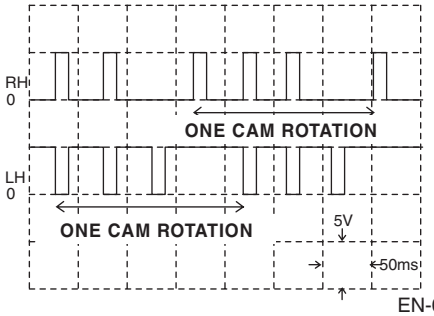 EN-05359

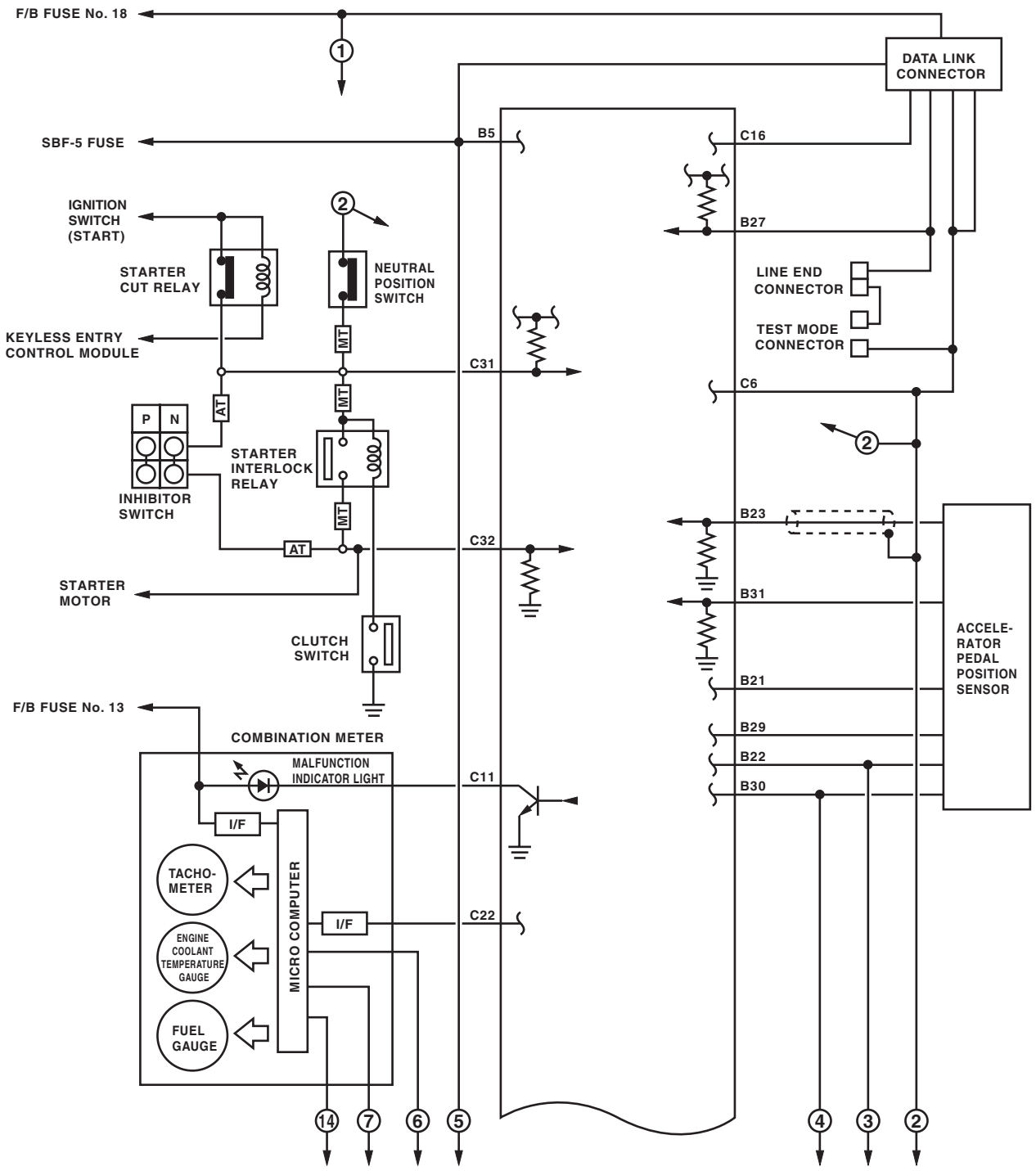
F/B FUSE No. 18
1
DATA LINK CONNECTOR
SBF-5 FUSE
B5
C16
IGNITION SWITCH (START)
2
B27
STARTER CUT RELAY
NEUTRAL POSITION SWITCH
LINE END CONNECTOR
TEST MODE CONNECTOR
KEYLESS ENTRY CONTROL MODULE
MT
C31
C6
AT
P
N
STARTER INTERLOCK RELAY
INHIBITOR SWITCH
B23
C32
STARTER MOTOR
B31
CLUTCH SWITCH
ACCELE-RATOR PEDAL POSITION SENSOR
B21
F/B FUSE No. 13
B29
COMBINATION METER
B22
MALFUNCTION INDICATOR LIGHT
C11
B30
I/F
TACHO-METER
MICRO COMPUTER
C22
ENGINE COOLANT TEMPERATURE GAUGE
FUEL GAUGE
14
7
6
5
4
3
2

EN-05443

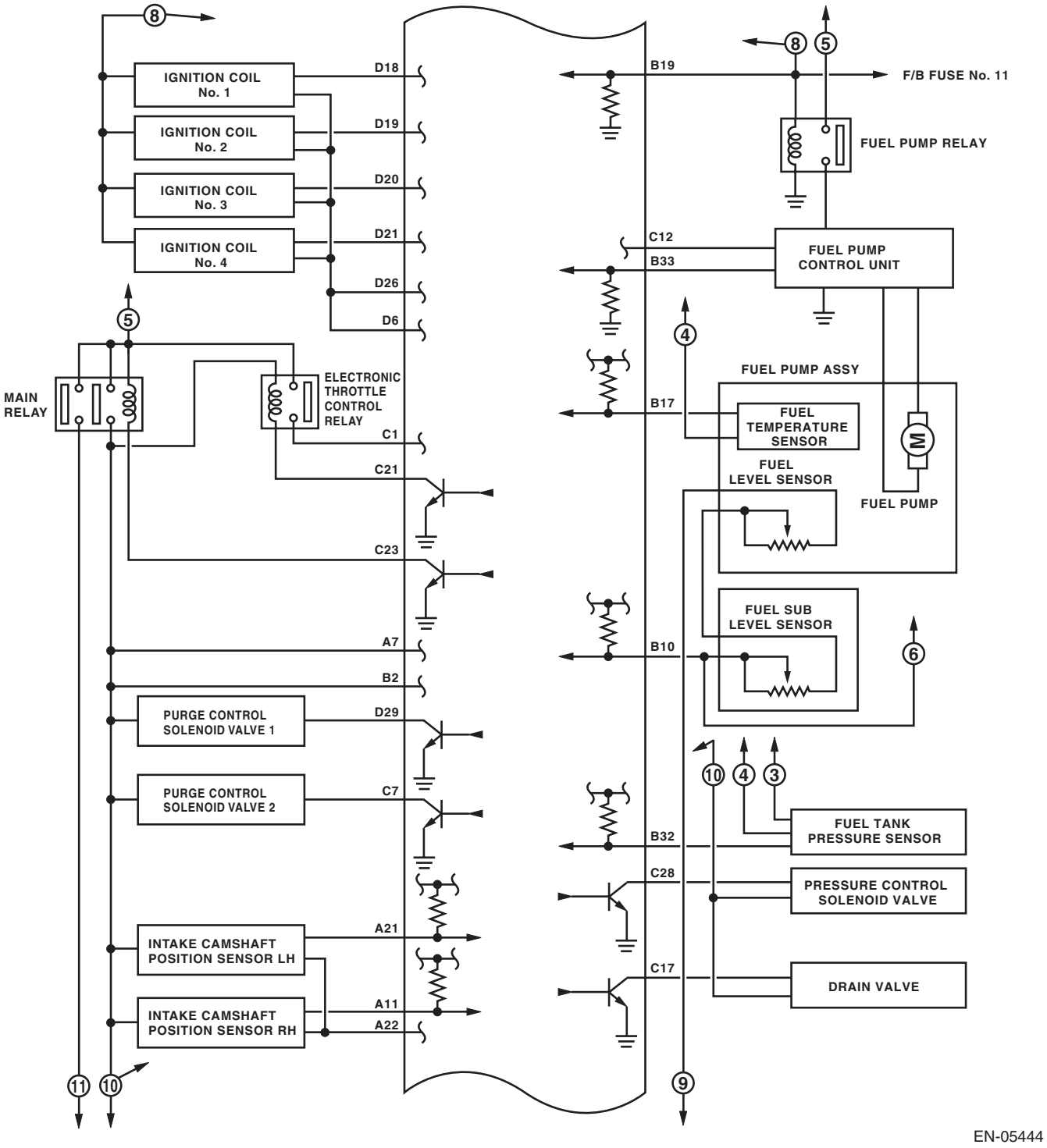
IGNITION COIL No. 1
IGNITION COIL No. 2
IGNITION COIL No. 3
IGNITION COIL No. 4
D18
D19
D20
D21
D26
D6
B19
F/B FUSE No. 11
FUEL PUMP RELAY
C12
B33
FUEL PUMP CONTROL UNIT
MAIN RELAY
ELECTRONIC THROTTLE CONTROL RELAY
C1
C21
C23
FUEL PUMP ASSY
B17
FUEL TEMPERATURE SENSOR
FUEL LEVEL SENSOR
FUEL PUMP
FUEL SUB LEVEL SENSOR
A7
B2
B10
PURGE CONTROL SOLENOID VALVE 1
D29
PURGE CONTROL SOLENOID VALVE 2
C7
B32
FUEL TANK PRESSURE SENSOR
C28
PRESSURE CONTROL SOLENOID VALVE
INTAKE CAMSHAFT POSITION SENSOR LH
A21
C17
DRAIN VALVE
INTAKE CAMSHAFT POSITION SENSOR RH
A11
A22

EN-05444

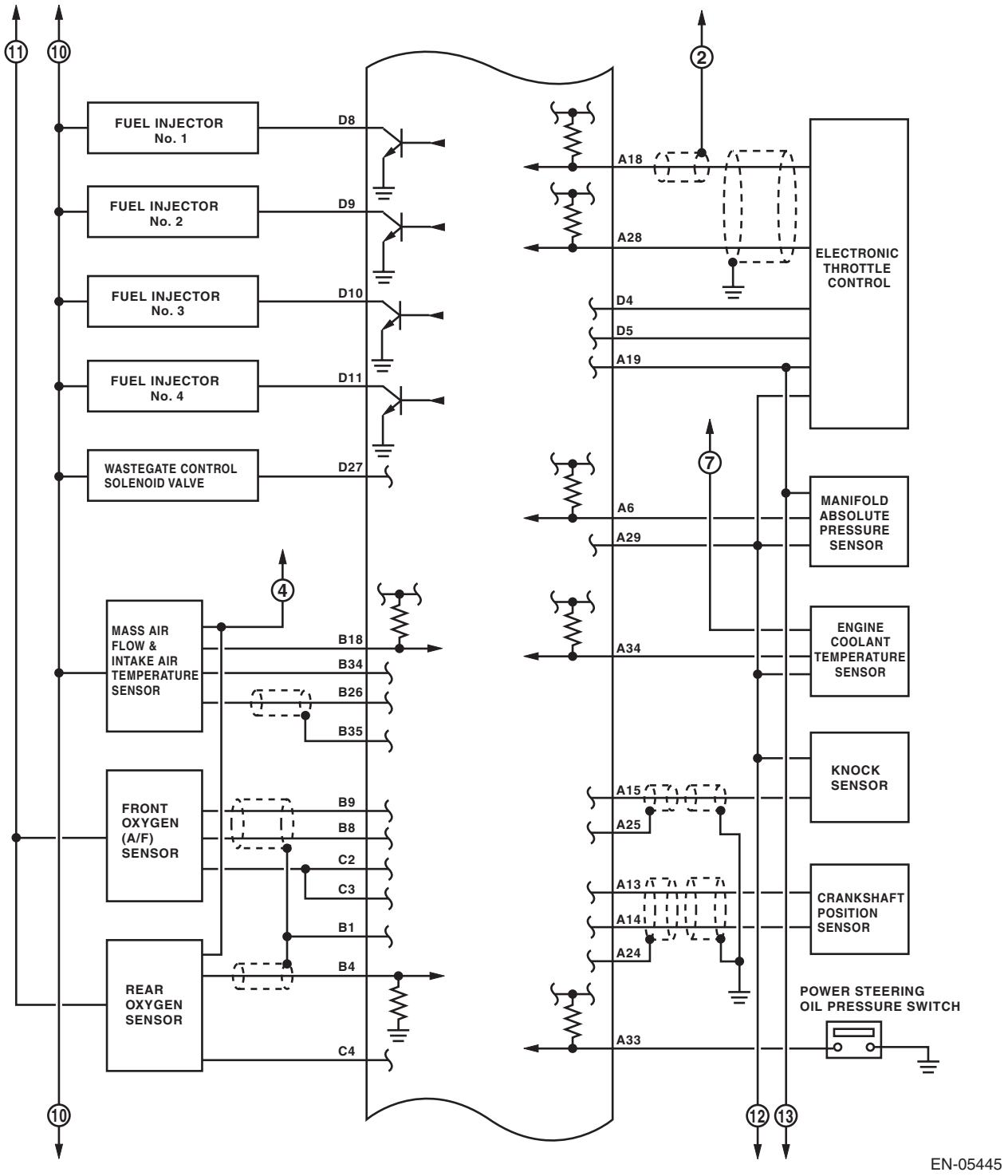
11
10
FUEL INJECTOR No. 1
FUEL INJECTOR No. 2
FUEL INJECTOR No. 3
FUEL INJECTOR No. 4
WASTEGATE CONTROL SOLENOID VALVE
MASS AIR FLOW & INTAKE AIR TEMPERATURE SENSOR
FRONT OXYGEN (A/F) SENSOR
REAR OXYGEN SENSOR
D8
D9
D10
D11
D27
B18
B34
B26
B35
B9
B8
C2
C3
B1
B4
C4
4
2
7
A18
A28
D4
D5
A19
A6
A29
A34
A15
A25
A13
A14
A24
A33
ELECTRONIC THROTTLE CONTROL
MANIFOLD ABSOLUTE PRESSURE SENSOR
ENGINE COOLANT TEMPERATURE SENSOR
KNOCK SENSOR
CRANKSHAFT POSITION SENSOR
POWER STEERING OIL PRESSURE SWITCH
12
13
EN-05445

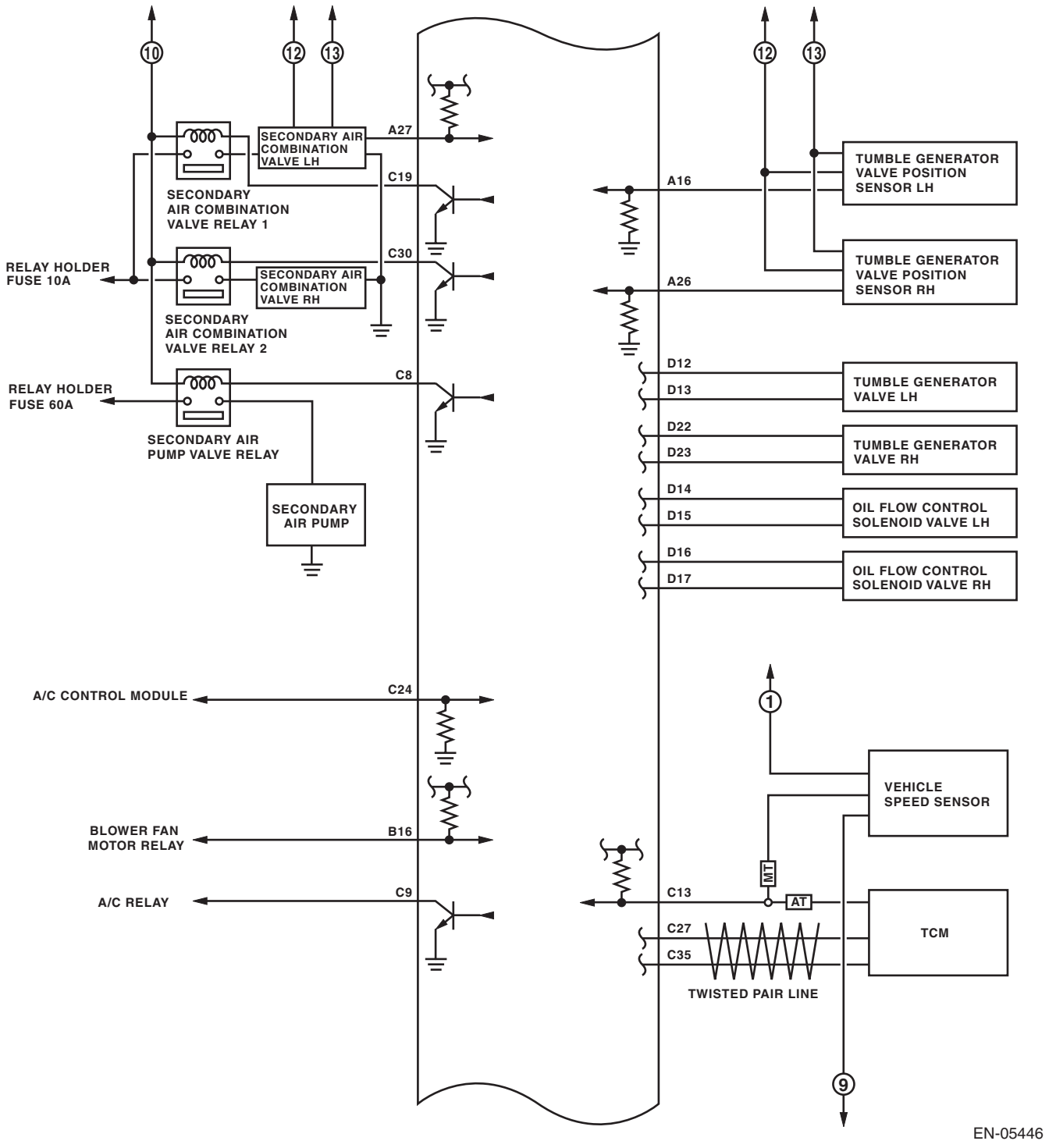
10
12
13
12
13
SECONDARY AIR COMBINATION VALVE LH
A27
C19
SECONDARY AIR COMBINATION VALVE RELAY 1
RELAY HOLDER FUSE 10A
C30
SECONDARY AIR COMBINATION VALVE RH
SECONDARY AIR COMBINATION VALVE RELAY 2
RELAY HOLDER FUSE 60A
C8
SECONDARY AIR PUMP VALVE RELAY
SECONDARY AIR PUMP
A16
TUMBLE GENERATOR VALVE POSITION SENSOR LH
A26
TUMBLE GENERATOR VALVE POSITION SENSOR RH
D12
D13
TUMBLE GENERATOR VALVE LH
D22
D23
TUMBLE GENERATOR VALVE RH
D14
D15
OIL FLOW CONTROL SOLENOID VALVE LH
D16
D17
OIL FLOW CONTROL SOLENOID VALVE RH
A/C CONTROL MODULE
C24
1
VEHICLE SPEED SENSOR
BLOWER FAN MOTOR RELAY
B16
A/C RELAY
C9
MT
C13
AT
C27
C35
TCM
TWISTED PAIR LINE
9
EN-05446

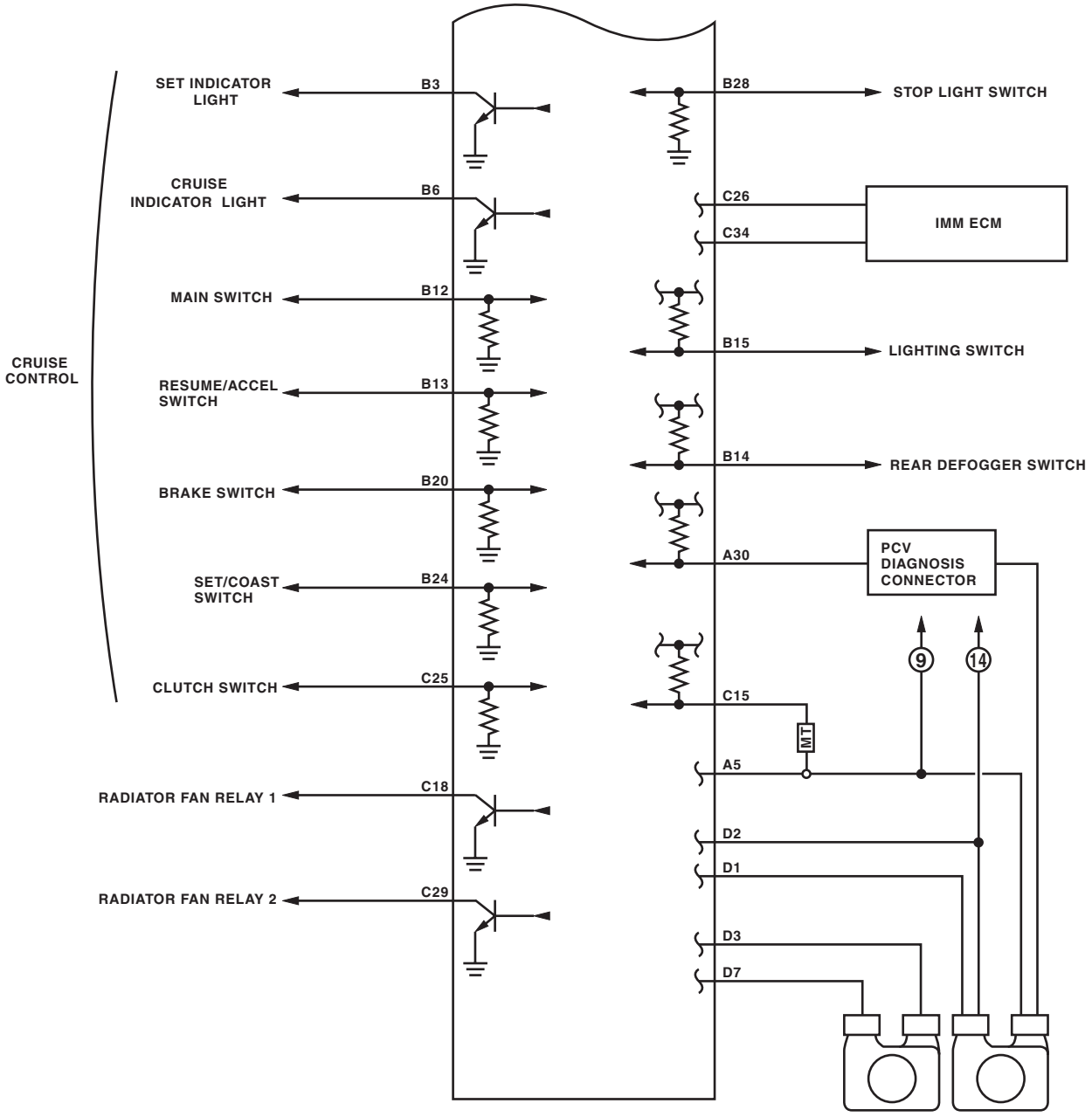
CRUISE CONTROL
SET INDICATOR LIGHT
B3
CRUISE INDICATOR LIGHT
B6
MAIN SWITCH
B12
RESUME/ACCEL SWITCH
B13
BRAKE SWITCH
B20
SET/COAST SWITCH
B24
CLUTCH SWITCH
C25
RADIATOR FAN RELAY 1
C18
RADIATOR FAN RELAY 2
C29
B28
STOP LIGHT SWITCH
C26
C34
IMM ECM
B15
LIGHTING SWITCH
B14
REAR DEFOGGER SWITCH
A30
PCV DIAGNOSIS CONNECTOR
C15
M/T
A5
9
14
D2
D1
D3
D7

EN-05447